PLEXICOR SHOWROOM CATALOGUE

PRODUCT CATALOGUE

plexicor
THE BEST IN BATHROOMWARE

2018 | 2019

INTRO DUCTION

At Plexicor we pride ourselves in being the professional's choice when it comes to everyday bathing solutions. With over 50 years of experience in the market, Plexicor is well positioned as a brand you can trust. Our products are manufactured from top quality materials, yet remain at an affordable price and are complimented by our renowned aftersales service and expert technical support.

Now 100% owned by LIXIL, we have access to the knowledge, capabilities, product platforms and manufacturing excellence of the biggest and most innovative sanitaryware company in the world. This, combined with a wealth of local industry knowledge, experience and skills, will ensure we continue to manufacture and supply the highest of quality baths, ensuring you are making the smart choice for your project.

I would like to take this opportunity to thank all our customers, who have played an integral role in building our brand and look forward to continuing our success story with you.

Yours sincerely
JJ De Waal
General Manager, Plexicor & Libra

ABOUT US

Day-Nite Plastics was renamed as Plexicor Pty Ltd in 1971. Plexicor produced a number of acrylic bathroom fittings which became the best selling range across the country, and this led to the production of baths in 1974.

At that stage acrylic baths were manufactured and marketed by Van Leer and Prodorite but as a percentage of the market acrylic sales was no more than 13 %. Defy cast iron dominated.

The demand for acrylic baths soon over took that of cast iron. Plexicor designed and produced all its own plant in house and also supplied turnkey operations to Australia and Israel.

In 1987 coloured sinks were the fashion and most were made of Astorite an ICI thermoset material. Plexicor in conjunction with AECI developed a thermoforming material which it christened, Karran.

In 2001 the company was acquired by Hartford Holdings, the holding company of Trojan plastics in the UK.

In 2003 the manufacturing facility relocated from Ladysmith to bigger premises in Pietermaritzburg to satisfy increasing demand. The Plexicor brand established itself as one of the leading premium quality brands.

In 2010 Plexicor was acquired by Dawn and relocated the manufacturing facility to the Meyerton manufacturing site in 2012, from where it still manufactures the highest quality of bathroom ware.

In 2017 LIXIL acquired several sanitary ware brands of which Plexicor was one of them, now forming part of LIXIL Africa.

ORGANISATIONAL TIMELINE

1880

1873
Carl Nestler, the technological leader for thermostats was founded

1940

1943
Vaal Pottery started off by manufacturing ornaments, ashtrays and crockery

1946
Vaal Sanitaryware started manufacturing sanware

1936
Friderich Grohe buys Berkenhoff & Paschedag

1948
B&P was renamed after Friedrich Grohe Armaturenfabrik

1950

1950
Friedrich Grohe infiltrated the South African market

1951
Consolidated Brassware was established by Friedrich Grohe and Paul Schults

1954
Consolidated Brassware changed it's name to Cobra Water Technology

1960

1956
GROHE acquires Carl Nestler, creating the subsidiary GROHE Thermostat GmbH

1961
GROHE expands internationally

1970

1971
Day-Nite Plastics was renamed as Plexicor and started producing acrylic bathroom fittings - leading to the production of baths in 1974

Moved to new Premises

2010
Gave Libra & Plexicor the impetus to grow in demand across Africa and Europe.

1979
Libra began manufacturing bathroom products in Cape Town

1982
The GROHE plant in Edelburg, Hemer opens

1991
GROHE goes public and buys Eichelberg

2015
LIXIL takes over management of GROHE Dawn Water Technology

1980 2000 2020

1990 2010

1980
Isca was created by Yigal Yaretzkey and Avi Schacher

1986
Independent Cobra was born

2014
GROHE Dawn Water Technology was formed

2017
LIXIL wholly acquires GROHE Dawn Water Technology

OUR EXPERTISE

Quality/Certifications

Quality remains one of the key pillars of continuous improvement.

Our Plexicor people are continually coached and trained to ensure they constantly maintain our quality principles and adhere to correct procedures.

Our world class manufacturing facility in Meyerton is certified to conform to the highest Quality Standards.

Our products are tested and conform to several standards which include:- SABS (South Africa Bureau of Standards) - SANS 1402-1 as well as European standards EN198 and American & Canadian standards - CSA B45.5-17/IAPMO Z124-2017 (Plastic plumbing fixtures).

Customer Service and Spares

Plexicor is renowned for their after-sales service and availability of spares giving our customers peace of mind.

A dedicated national after-sales service number (0861 21 21 21) enables customers to speak directly to a service consultant for over-the-phone advice or to book a service call for a consultant to personally visit the site in question.

STATE OF THE ART FACILITIES

Our Factories

With ongoing investment into our factories, we produce world class products using the latest plant equipment and technologies. This leads to improved efficiency and allows Plexicor to stay abreast of international trends.

GLOSSARY + GUIDELINE TABLE

How to read the product catalogue:

Product Image

Shower Tray — Short Description

Cast acrylic 900x900x150 shower tray — Long Description

Complimentary Products:
B0-WST-SHOWE — Product Code
Shower tray waste — Product Description

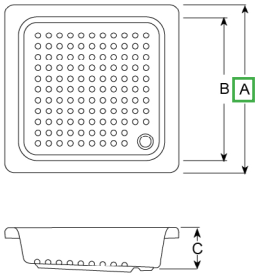

Line Drawing & Dimensions

Model	A	B	C
80	800	695	120
90	900	785	150

Table relating to the product and line drawings.

When there is a table, the number in the product range will differentiate the different models available.

The letters in the line drawings link to the letters in the tables. Eg. The 'A' dimension for the '80' model would be 800.

COLA 80 — Product Range
01-FP-TM001-NNNL — Product Code
BSS30211-2CQ — SAP Code
6009631110151 — Barcode

MOT's:

Plexicor products are produced to offer maximum added value to customers. The icons below showcase the various features and benefits of our product portfolio.

In the catalogue section of this book, the features attributed to each product are denoted by the relevant icon.

Quality Guarentee

All Plexicor baths are made from premium, sanitary grade, cast acrylic that pass through a vigorous quality check at the factory before being dispatched to our customers.

5 Star Service

Service teams are located throughout South Africa and are able to provide assistance. This ensures as quick reaction time to any post production concerns. They also provide installer training.

Bath Care

100% cast acrylic bath lining with no multi-layer extruded process allows minor scratches to be polished out.

PRODUCT CARE & MAINTENANCE

Cleaning and Care

Clean the bath with soap and water, as and when required. Should stubborn dirt prevail, Brasso may be used.

Maintenance

The frequency and extent of maintenance required for this product varies according to prevailing site and operational conditions. No regular maintenance is required and spare parts are available for key components.

LIXIL Africa Service Call Centre Contact:	0861 21 21 21
LIXIL Africa Service E-Mail:	service.africa@lixil.com
LIXIL Website:	www.lixil.co.za

WARRANTY

LIXIL Africa warrants that their products will be clear of material and manufacturing defects. Appraisal of the above will be done against ruling manufacturing specifications and standards at the date of manufacture. Defective product will be repaired or exchanged at LIXIL Africa's sole discretion. LIXIL Africa shall not be liable for indirect or consequential loss or damage.

THE WARRANTY WILL BE VOIDED UNDER THE FOLLOWING CONDITIONS:

- Products used with water pH falling outside of the guidelines set by the Department Of Water Affairs and Forestry or similar body.
- Products not installed by a registered or accredited installer.
- Products used with, or included in installations where water temperatures are outside of the temperature range stipulated for that product, or as laid down in the Standards for water supply and drainage (SANS 10252 & 10254) or an equivalent international standard.
- Products not installed according to manufacturer's installation instructions or according to valid Water Regulations and general good plumbing practice;
- Products which have failed as a result of dirt or debris in pipe-work which has not been flushed prior to the use of terminal fittings.
- Where a defect is attributable to the incorrect use or incorrect handling of the product;
- Where routine maintenance has been neglected.
- If spare parts other than the original spare parts are used during repairs or maintenance of the product;
- If damage was caused by transport by a third party transporter.
- If the surface of the product has been scratched;
- Products used or intended for display purposes.
- If consumables (e.g. filters, filter cartridges, aerators or batteries) or material subject to wear and tear (such as seals or hoses) are affected;
- If product damage is as a result of chemicals and cleaning agents, lime-scale build-up, aggressive environmental influences, or disruptions resulting in damage which are caused by freezing or lime-scale build-up.
- If the defect is caused by specific environmental circumstances (e.g. excess or negative pressure in the line, excess voltage or under voltage on the line);
- If the defect is attributable to wilful or negligent damage to the product by the user or a third party.

LIXIL AFRICA reserves the right to review any specific case in order to assess the validity of this warranty. LIXIL AFRICA may charge a discretionary service fee of R350-00 when called out to inspect products which are not LIXIL products or where there is an illegitimate claim.

THE WARRANTY IS VALID FOR:

- 10 years Taps & Mixers, Wastes, Capillary- and Compression fittings
- 3 years Showerheads
- 2 years Electronic Mixers components and Valves
- 2 years Valves (Geyser and Toilet)
- 10 years Cobra-Safe multi-layer pipe system (must be used with Cobra compression fittings and Cobra-Safe inserts or warranty shall be void)
- 10 years on all baths (Excluding Tanya, Scarlett, Widestart which carry a 5 year warranty)
- 20 years on baths with Amanzonite coating
- 10 years on all sanitaryware
- 6 months on all toilet seats supplied by Vaal Sanitaryware

MISCELLANEOUS:

This warranty shall apply in the above-mentioned scope and subject to the above-mentioned prerequisites. Proof of purchase will be required.

This LIXIL Africa warranty is carried by LIXIL Africa please contact our Service Department on 0861 212121 for warranty enquiries or further warranty information.

TABLE OF CONTENTS

1. Rectangular End Waste Baths 1

2. Rectangular Centre Waste Baths 5

3. Shower Baths 7

4. Corner Baths 9

5. Shower Trays 11

6. Basins 15

1

RECTANGULAR END WASTE BATHS

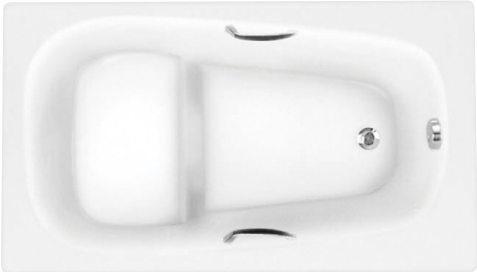

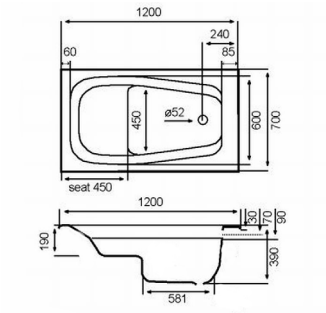

CARMEN 1200 SEAT
BRC-CAR-120-HS-L-WHI
BBR70982-2CQ
6005562818791

CARMEN 1200 SEAT NO HANDLES
BRC-CAR-120-NS-L-WHI
BBR70987-2CQ
6005562031411

Rectangular EW Bath

Cast acrylic 1200x700 rectangular end waste bath with seat and handles

Complimentary Products:
AS-WST-UNIPLAIN
52mm waste

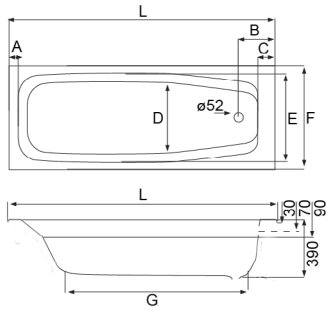

Rectangular EW Bath

Cast acrylic rectangular end waste bath

Complimentary Products:
AS-WST-UNIPLAIN
52mm waste

With Handles:

CARMEN 1200
BRC-CAR-120-WH-L-WHI
BBR70915-2CQ
6005562003258

CARMEN 1400
BRC-CAR-140-WH-L-WHI
BBR71015-2CQ
6005562031398

CARMEN 1500
BRC-CAR-150-WH-L-WHI
BBR71515-2CQ
6005562028923

CARMEN 1600
BRC-CAR-160-WH-L-WHI
BBR71615-2CQ
6005562003654

CARMEN 1700
BRC-CAR-170-WH-L-WHI
BBR71715-2CQ
6005562027872

CARMEN 750
BRC-CAR-750-WH-L-WHI
BBR71915-2CQ
6005562032616

CARMEN 1800
BRC-CAR-180-WH-L-WHI
BBR71815-2CQ
6005562030483

Without Handles:

CARMEN 1200
BRC-CAR-120-NH-L-WHI
BBR70964-2CQ
6005562030711

CARMEN 1400
BRC-CAR-140-NH-L-WHI
BBR71064-2CQ
6005562032210

CARMEN 1500
BRC-CAR-150-NH-L-WHI
BBR71503-2CQ
6005562019921

CARMEN 1600
BRC-CAR-160-NH-L-WHI
BBR71664-2CQ
6005562027858

CARMEN 1700
BRC-CAR-170-NH-L-WHI
BBR71764-2CQ
6005562028268

CARMEN 750
BRC-CAR-750-NH-L-WHI
BBR71964-2CQ
6005562031039

CARMEN 1800
BRC-CAR-180-NH-L-WHI
BBR71864-2CQ
6005562030490

Model	Length (L)	Litres	A	B	C	D	E	F	G
1200	1200	95	60	240	85	358	600	700	757
1400	1400	140	60	240	85	358	600	700	957
1500	1500	150	60	240	85	358	600	700	1057
1600	1600	165	60	240	90	358	600	700	1157
1700	1700	175	60	240	90	371	590	700	1259
750	1700	175	60	240	90	408	650	750	1257
1800	1800	185	60	240	90	458	700	800	1357

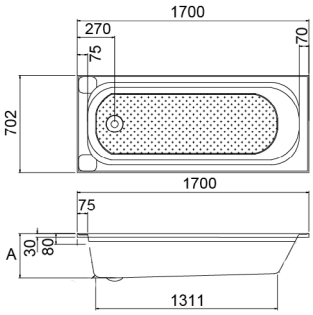

With Handles:

TANYA 320 ANTI-SLIP
01-FP-BM335-SSHL
BBC30614-2CQ
6009631116344

TANYA 390 SMOOTH BASE
01-FP-BM335-NNHL
BBC30515-2CQ
6009631114258

TANYA 390 ANTI-SLIP
01-FP-BM335-NHSL
BBC30503-2CQ
6009631116290

Without handles:

TANYA 320 ANTI-SLIP
01-FP-BM335-SSNL
BBC30651-2CQ
6009631116351

TANYA 390 SMOOTH BASE
01-FP-BM335-NNNL
BBC30564-2CQ
6009631114210

TANYA 390 ANTI-SLIP
01-FP-BM335-NNSL
BBC30603-2CQ
6009631119918

Rectangular EW Bath

Cast acrylic rectangular end waste bath

Complimentary Products:
AS-WST-UNIPLAIN
52mm waste

Model	Litres	A
320	110	320
390	175	390

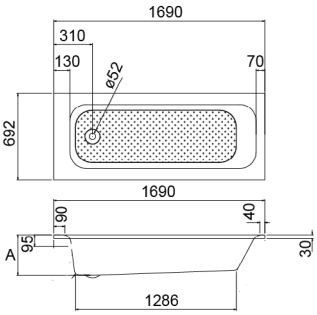

With Handles:

WIDESTAR 320 ANTI-SLIP
01-FP-BM217-SSHL-M
BBC30814-2CQ
6009631116368

WIDESTAR 390 SMOOTH BASE
01-FP-BM217-NNHL-M
BBC30715-2CQ
6009631113015

WIDESTAR 390 ANTI-SLIP
01-FP-BM217-NSHL
BBC30751-2CQ255
6009631116306

Without Handles:

WIDESTAR 320 ANTI-SLIP
01-FP-BM217-SSNL-M
BBC30851-2CQ
6009631116375

WIDESTAR 390 SMOOTH BASE
01-FP-BM217-NNNL-M
BBC30764-2CQ
6009631111110

Rectangular EW Bath

Cast acrylic rectangular end waste bath

Complimentary Products:
AS-WST-UNIPLAIN
52mm waste

Model	Litres	A
320	138	320
390	175	390

2

RECTANGULAR CENTRE WASTE BATHS

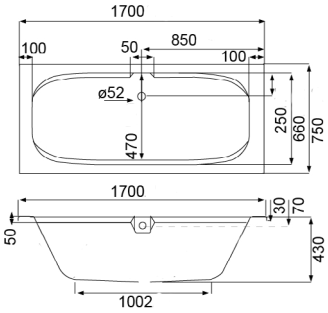

WINDWARD 1700
BRC-WIN-170-NH-L-WHI
BBR79903-2CQ
6005562032623

Rectangular CW Bath

Cast acrylic 1700x750 rectangular centre waste bath. 200 litres.

Complimentary Products:
AS-WST-UNIPLAIN
52mm waste

3

SHOWER BATHS

Left Hand Shown

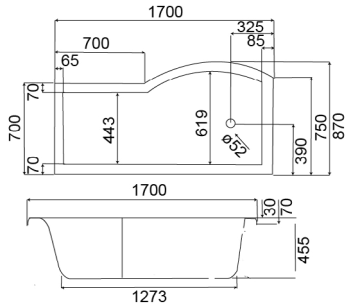

DISCOVERY LEFT HAND
BSB-DIS-LHO-NH-L-WHI
BBS60264-2CQ
6005562812720

DISCOVERY RIGHT HAND
BSB-DIS-RHO-NH-L-WHI
BBS60364-2CQ
6005562812966

Shower Bath

Cast acrylic 1700x700 shower bath left hand. 240 litres.

Complimentary Products:
PNB-DIS-RVL-ST-L-WHI
Discovery panel long
PNB-DIS-RVS-ST-L-WHI
Discovery panel short
ENC-DIS-REV
Discovery screen
AS-WST-UNIPLAIN
52mm waste
KTF-DIS-SHB-NA-L
Foot kit shower baths

Left Hand Shown

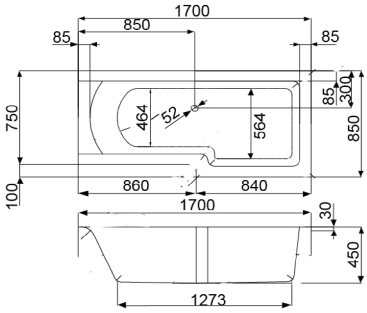

ELEGANCIA LEFT HAND
BSB-ELE-LHO-NH-L-WHI
BBS60464-2CQ
6005562082666

ELEGANCIA RIGHT HAND
BSB-ELE-RHO-NH-L-WHI
BBS60564-2CQ
6005562082659

Shower Bath

Cast acrylic 1700x750 shower bath right hand. 260 litres.

Complimentary Products:
PNB-ELE-SBL-ST-L-WHI
Elegancia panel long
PNB-DIS-RVS-ST-L-WHI
Elegancia panel short
ENC-ELE-REV
Elegancia screen
AS-WST-UNIPLAIN
52mm waste
KTF-DIS-SHB-NA-L
Foot kit shower baths

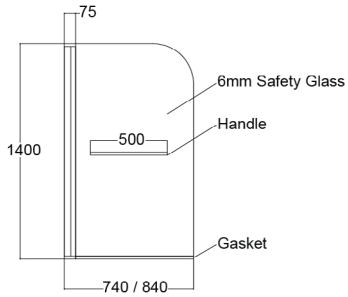

Isede 1800 Reversible Screen
ENC-ISE-180-REV
BEN00503-8HQ
6005562817800

Shower Bath Screen

840x1400 reversable shower bath screen

4

CORNER BATHS

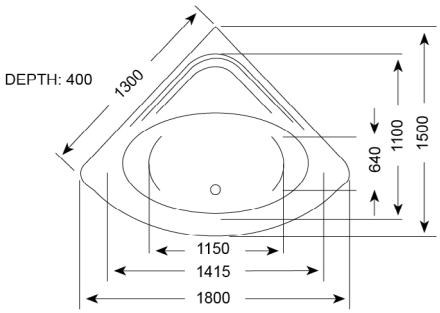

FLAMINGO
01-FP-CM001-NNNL
BBC30151-2CQ
6009631110052

Corner Bath

Cast acrylic 1300x1300 corner bath.
230 litres.

Complimentary Products:
AS-WST-UNIPLAIN
52mm waste
01-FP-PM001-NNNN
Flamingo panel

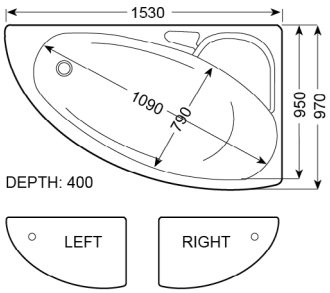

PETRA LEFT HAND
01-FP-CM007-NNNL
BBN42364-2CQ
6009631110328

PETRA RIGHT HAND
01-FP-CM008-NNNL
BBN42464-2CQ
6009631110380

Corner Bath

Cast acrylic 1530x1000 corner bath.
220 litres.

Complimentary Products:
AS-WST-UNIPLAIN
52mm waste
01-FP-PM011-NNNN
Petra panel

5

SHOWER TRAYS

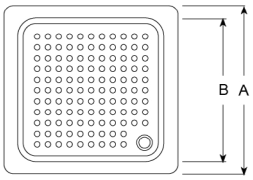

COLA 80
01-FP-TM001-NNNL
BSS30211-2CQ
6009631110151

COLA 90
01-FP-TM002-NNNL
BSS30311-2CQ
6009631110106

Shower Tray

Cast acrylic shower tray

Complimentary Products:
B0-WST-SHOWE
Shower tray waste

Model	A	B	C
80	800	695	120
90	900	785	150

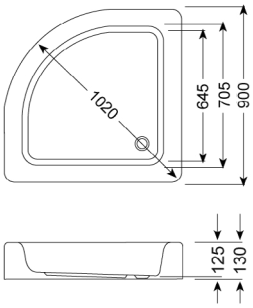

QUARTER ROUND
01-FP-TM003-NNNL
BSN10530-2CQ
6009631110120

Shower Tray

Cast acrylic 900x900x130 shower tray

Complimentary Products:
B0-WST-SHOWE
Shower tray waste

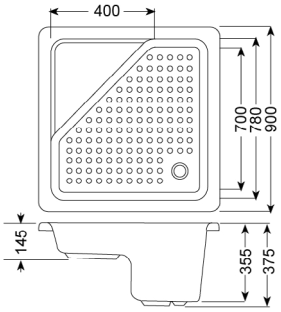

SITRA
01-FP-TM004-NNNL
BSS31130-2CQ
6009631110885

Shower Tray

Cast acrylic 900x900x375 shower tray

Complimentary Products:
B0-WST-SHOWE
Shower tray waste

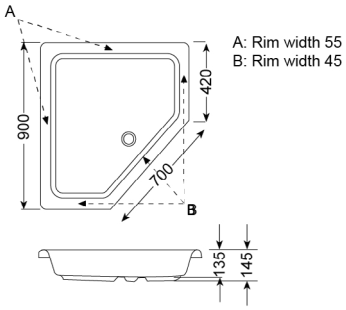

PENTAGON
01-FP-TM014-NNNL
BSC40230-2CQ
6009631110144

Shower Tray

Cast acrylic 900x900x145 shower tray

Complimentary Products:
B0-WST-SHOWE
Shower tray waste

GALA 900
SFS-GAL-S90-PF-L-WHI
BSF00232-2CQ
6005562079703

GALA 1000
SFS-GAL-S10-PF-L-WHI
BSF00132-2CQ
6005562815837

Shower Tray

Cast acrylic shower tray

Complimentary Products:
B0-WST-SHOWE
Shower tray waste
KTF-SHW-TRY-PF-A
Foot kit Gala

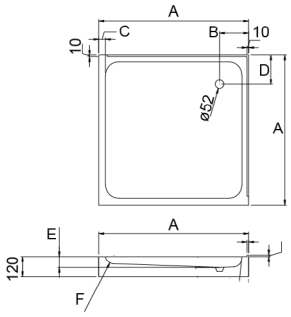

Model	A	B	C	D	E	F
900	900	175	40	175	65	R50
1000	1000	180	60	180	45	R25

6

BASINS

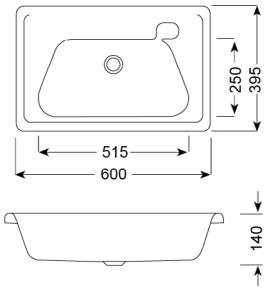

MICHELLE
01-FP-VM006-NNNL
BVS11030-2CQ
6009631110212

Basin

Cast acrylic 600x400x140 vanity basin

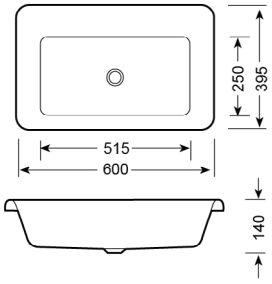

RAVE
01-FP-VM016-NNNL
BVS11430-2CQ
6009631111486

Basin

Cast acrylic 600x400x140 vanity basin

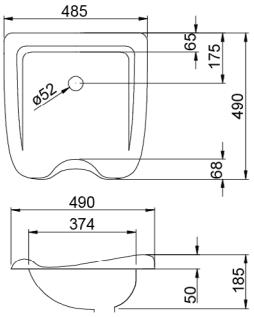

SALON
VSI-SAL-050-NA-L-WHI
BVS11530-2CQ
6005562002626

Basin

Cast acrylic 490x485x185 vanity basin